Operator's Manual

B-73

THREE POINT HITCH TWO STAGE

SNOW BLOWER

BER-VAC

MODELS STARTING AT SERIAL NO. 808746AND UP

TABLE OF CONTENTS

TO THE PURCHASER 1

SAFETY PRECAUTIONS 2

SAFETY RECOMMENDATIONS 2

PREPARATION 2

OPERATING 2

OPERATING THE SNOWBLOWER 4

MAINTENANCE 4

ASSEMBLY 5
- General 5
- P.T.O. Shaft installation 5
- Assembly attaching arms & A-frame 5
- P.T.O. Shield & support chain 7

TRACTOR ATTACHING, REAR SNOWBLOWER 8

TRACTOR DETACHING, REAR SNOWBLOWER 8

CHUTE AND ROTATION 8
- Assembly chute to snowblower 8
- Manual chute rotation bracket 9
- Cable installation, manual chute rotation (Rear mounted snowblower) 9
- Hydraulic chute rotation bracket (Standard chute) 10
- Cable installation hydraulic chute (Standard chute) 10
- Manual deflector 11

ACCESSORIES 11

LUBRIFICATION 12

TORQUE REFERENCE 13

FRAME AND RELATED PARTS DRAWING 14-16

FRAME AND RELATED PARTS LIST 15-17

P.T.O. SHAFT DRAWING 18

GEAR BOX DRAWING 19

SAFETY DECALS 20

TO THE PURCHASER

This new snowblower was carefully designed to give years of dependable service.

This manual has been provided to assist in the safe operation and service of your new snowblower.

NOTE: All photographs and illustrations in the manual may not necessarily depict the actual models or equipment, but are intended for reference only and are based on the latest product information available at the time of publication.

Familiarize yourself fully with the safety recommendations and operating procedures before putting the machine to use. Carefully read, understand and follow these recommendations and insist that they be followed by those who work with you.

This safety alert symbol identifies important safety messages in this manual. When you see it, be alert to the possibility of personal injury and carefully read the message that follows.

Record your snowblower serial number and size. Your dealer requires this information to give you prompt, efficient service when ordering parts or attachments. Service with genuine Ber-Vac parts when replacement parts are required.

Right hand and left hand are determined by facing in the direction the snowblower will travel when in use.

MODEL .....

SERIAL NUMBER .....

DATE PURCHASED .....

C A U T I O N

PREVENT ACCIDENTS

BE SURE TO OBSERVE SAFETY PRECAUTIONS

SAFETY RECOMMENDATIONS

This safety alert symbol identifies important safety messages. When you see it, be alert to the possibility of personal injury and carefully read the message that follows.

1. Read the Operator's Manual carefully. Be thoroughly familiar with the controls and proper use of the equipment. Know how to stop the unit and disengage the controls quickly.
2. Never allow children to operate equipment. Never allow adults to operate equipment without proper instruction.
3. Keep the area of operation clear of all persons, especially small children, and pets.
4. Clothing worn by the operator should be fairly tight and belted. Loose jackets, skirts, shirts, sleeves, loose scarves and so forth should not be permitted because of the danger of getting into moving parts.

PREPARATION

1. (Before the snow season). Thoroughly inspect the area where the equipment is to be used and remove all door mats, sleds, boards, wires and other foreign objects.
2. Disengage clutch and P.T.O., and shift into neutral before starting engine.
3. Do not operate equipment without wearing adequate winter outer garments.
4. Handle fuel with care as it is highly flammable.
   a) Use approved fuel container.
   b) Never add fuel to a running engine or a hot engine.
   c) Fill fuel tank outdoors with extreme care. Never fill fuel tank indoors.
   d) Replace fuel cap securely and wipe up spilled fuel.
5. Adjust collector housing height to clear gravel or crushed rock surface.
6. Never attempt to make any adjustments while engine is running.
7. Provide adequate blocking before working under the snowblower when in raised position.
8. Hydraulic fluid escaping from a small hole can be almost invisible and can penetrate the skin. Use a piece of cardboard or wood, rather than the hands to search for suspected leaks.

OPERATING

1. Before starting, remove any ice that has accumulated in the auger and fan.
2. Be on the look out for foreign objects that could enter the blower while operating.
3. Make sure that the P.T.O. is in the OFF position before starting engine.
4. Do not put hands or feet near rotating parts. Keep clear of discharge opening at all times.
5. Exercise extreme caution when operating on or crossing a gravel drive, walks, or roads. Stay alert for hidden hazards of traffic. Do not carry passengers.
6. Do not use hands or feet to unplug spout.
7. Use adequate safety warning lights. Check local regulations.

8. After striking a foreign object, stop the engine, thoroughly inspect the snowblower for damage and repair the damage before restarting and operating the snowblower.
9. If the snowblower should start to vibrate abnormally, stop the engine immediately and check for the cause. Vibration is generally a warning of trouble.
10. Stop the engine whenever you leave the operating position, before unclogging the collector/impellor housing or discharge guide, and before making any repairs, adjustments or inspections.
11. Take all possible precautions when leaving the vehicle unattended. Disengage the P.T.O., lower the attachment, shift into neutral, set the parking brake, stop the engine and remove the key.
12. When cleaning, repairing or inspecting, make certain auger/fan and all moving parts have stopped.
13. Do not run engine indoors except when starting engine and transporting snowblower in or out of building. Open outside doors as exhaust fumes are dangerous.
14. Do not clear snow across the face of slopes. Exercise extreme caution when changing direction on slopes. Do not attempt to clear steep slopes.
15. Never operate snowblower without guards, plates and other safety protective devices in place.
16. Never operate snowblower near glass enclosures, automobiles, window wells, drop-offs, etc., without proper adjustment of snow discharge angle.
17. Keep children and pets away.
18. Never operate machine at high transport speeds on a slippery surface.
19. Use care when backing up.
20. Never direct discharge at bystanders or allow anyone in front of unit.
21. Disengage power to auger/fan when transporting or when not in use.
22. Use only approved attachments and accessories (such as wheel weights, counterweights, etc.)
23. Never operate the snowblower without good visibility and lighting.
24. Use of tire chains and wheel weights for better traction and stability is recommended.
25. Prolonged exposure to loud noise can cause impairment or loss of hearing. Wear a suitable hearing protective device such as earmuffs or earplugs to protect against objectionable or uncomfortable loud noises.

OPERATING THE SNOWBLOWER

1. Check the oil level in the gearbox and if necessary, add A.G.M.A. 5EP extreme pressure oil. (A.G.M.A. is American Gear Manufacturers Association).
2. Check the 2 shear bolts, one on the PTO drive shaft, and one on the auger drive cross shaft between the gearbox and drive chain for proper tightness.
3. Grease each u-joint fitting. Slide PTO drive shaft apart and coat sliding surfaces with grease.
4. Check the drive shaft to be sure it is not obstructed in any way, particularly by the tractor drawbar. Pay special attention when the snowblower is raised and lowered for the first time, that the PTO shaft is not too long or too short.
5. Check sprocket alignment.
6. Lubricate chute base and adjust rotation cable if necessary.
7. Tire chains and front bumper weights are recommended for better traction and stability.
8. Make sure that the blower is clear of snow before engaging the blower.
9. Make sure that the auger and fan operate freely.
10. Start the tractor engine.
11. Before engaging the P.T.O., always have the engine running at idle.
12. Operate the blower at maximum RPM.

MAINTENANCE

Gearbox: Check oil level in gearbox every month. If necessary, add A.G.M.A. 5EP extreme pressure oil.

PTO Drive Shaft: Grease each u-joint fitting every 8 hours of operation. Slide drive shaft apart and coat sliding surfaces with grease every 8 hours.

Chute: Lubricate welded lip on chute base and rotate chute several times to insure even application of grease. Lubricate as often as necessary to keep rotation working smoothly and freely.

Chute Rotator: Oil rotator shaft when necessary to keep it working smoothly.

Sprockets: Excessive sprocket wear is usually caused by improper sprocket alignment.

Idler: Adjust to maintain light tension on chain.

Chain: Under exceptionally clean conditions the drive chain can be lubricated with chain saw chain lubricant, but in sandy and/or muddy conditions, chain lubrication is not recommended, as sand and mud tends to adhere to oiled chain.

Cross Shaft Shear Plate: Lubricate once a month.

Shear Bolts: Always use grade 5 safety shear bolts.
1. P.T.O. Drive Shaft - use 3/8" x $2\frac{1}{4}$" bolt.
2. Auger Drive Cross Shaft - use 5/16" x 2" bolt.

ASSEMBLY

GENERAL

The Snow Blower is assembled at the factory, however, tractor mounting kit must be assembled.

Open carton and lay out all parts for assembly. Separate bolts and nuts into various sizes.

PTO SHAFT INSTALLATION

FIG. 9: Clean paint from gearbox input shaft and inside yokes on PTO.

Install key in gearbox shaft.

Slide PTO yoke, 1, on shaft, use sliding action of PTO to push yoke in place. DO NOT USE A HAMMER.

Align hole in PTO yoke with hole in shaft and install 5/16" x 3" bolt, lock washer and nut.

Secure key with 3/8" x 1/2" Allen set screw.

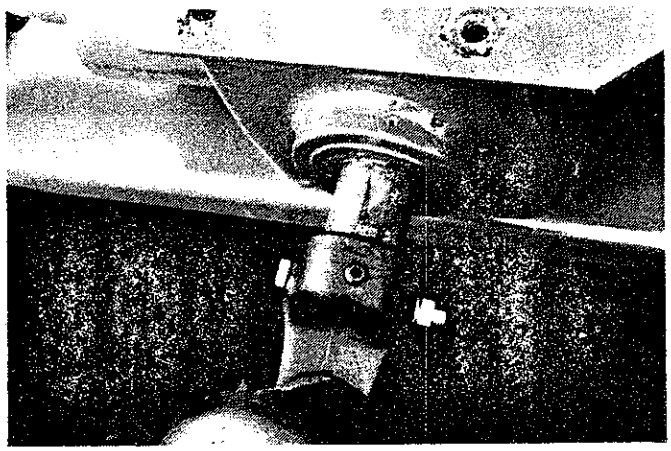

FIG. 9

ASSEMBLE ATTACHING ARMS & A-FRAME

B-73 Snow Blower

NOTE: Leave all bolts loose during assembly and tighten after assembly.

FIG. 10: Install lower attaching arms, 1, in square tubes on blower. Shims, supplied, should be installed between arms and blower sockets to ensure a tight fit.

Attaching arms have two holes. Use holes depending on tractor lower link length to provide a minimum 6" overlap of PTO sliding sections when Snow Blower is attached to tractor. Bolt in place with 3/8" x 4" bolts, lock washers and nuts.

Install A-frame assembly, 3, inside flat plates on attaching arms and Install hitch pins, 4, from outside in.

Attach top brace to A-frame using lower hole, 5, using 3/4" x 4" bolt, lock washer and nut.

Align rear brace hole, 6, and install 3/4" x 1-1/2" bolt, lock washer and nut. Install bolt up through blower housing with nut on top. If lower hitch tubes are assembled in extended position, brace must also be bolted in extended position.

Tighten all bolts with reference to "Torque Chart".

NOTE: Make sure linch pin holes on lower link pins are vertical when nuts are tight.

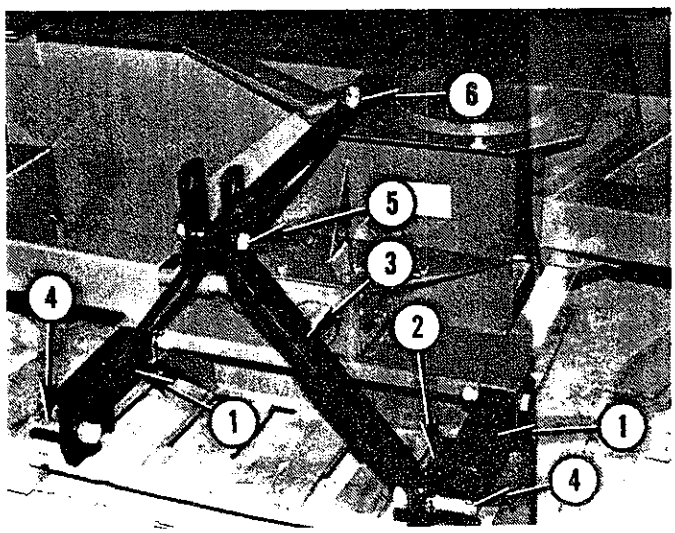

FIG. 10

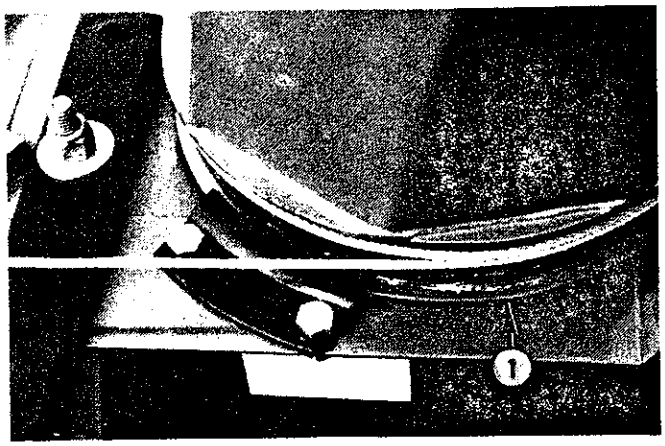

FIG. 2

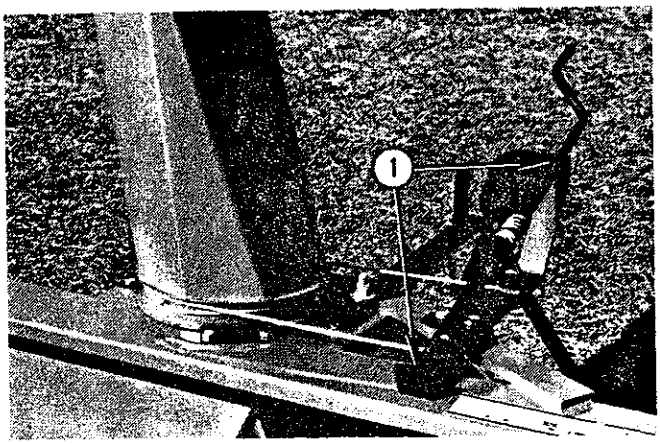

FIG. 3

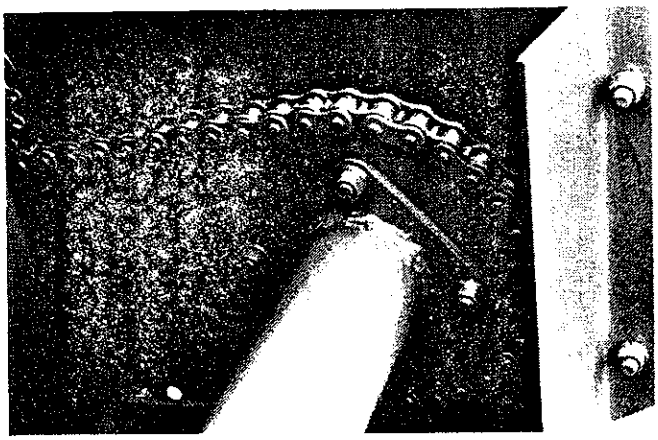

FIG. 4

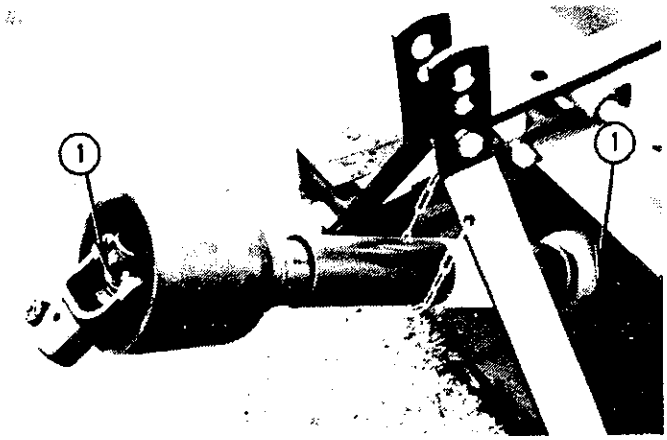

FIG. 5

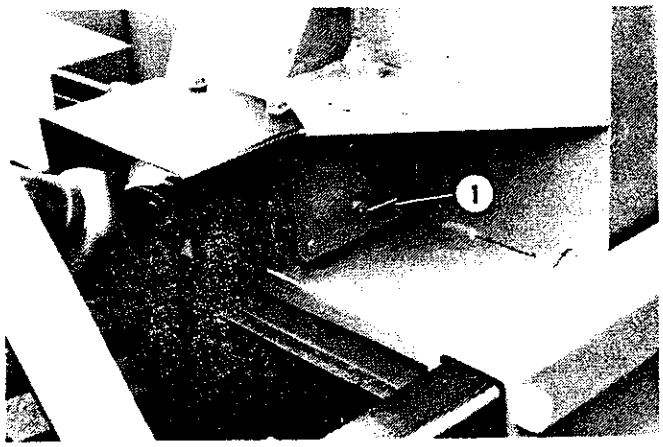

FIG. 6

FIG. 7

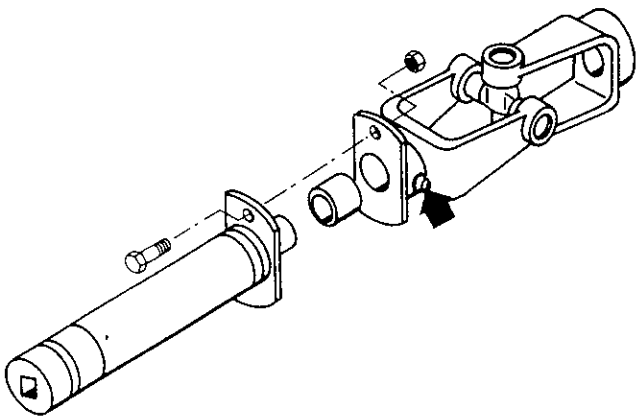

FIG. 8

B-84 Snow Blower

NOTE: Leave all bolts loose during assembly and tighten after assembly is completed.

FIG. 11: Attach lower attaching arms, 1, in square tubes on blower. Use shims, supplied, to ensure arms are a tight fit in blower tubes. There is an upright plate, 2, on each arm. Locate plate on inside.

Attaching arms have two holes. Use holes depending on tractor lower link length to provide a minimum of 6" overlap of PTO sliding sections when Snow Blower is attached.

Attach A-frame, 3, to inside of plates, 2, and bolt in place with 3/4" x 2" bolts, lock washers and nuts.

Attach top brace to A-frame using top hole, and bolt in place with 3/4" x 4" bolt, lock washers and nut.

Align rear brace hole, 4, and secure with 3/4" x 1-1/2" bolt, lock washer and nut. Install bolt up through housing with nut on top. If lower hitch tubes are assembled in extended position, brace must also be bolted in extended position.

Tighten all bolts with reference to "Torque Chart".

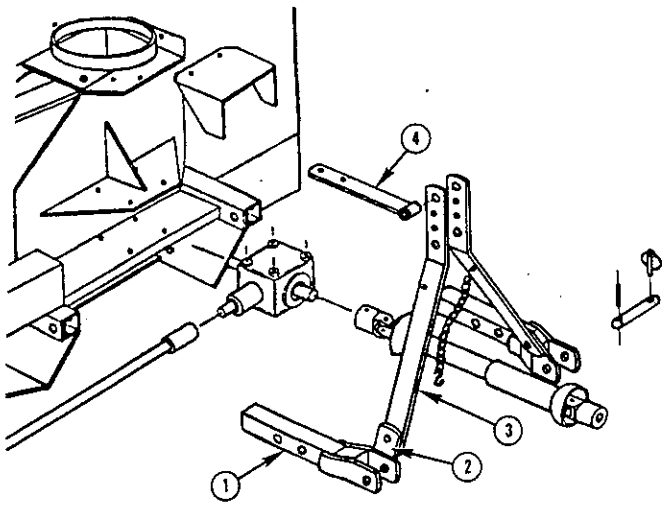

FIG. 11

PTO SHIELD & SUPPORT CHAIN

FIG. 12: Remove two 1/2" x 1" bolts from rear of gearbox and install PTO shield, 1, at that location. Replace and retorque bolts.

Install "S" hooks, 2, on each end of 12" PTO support chain and bend hooks to prevent removal from chain.

Attach "S" hook with chain to one side of A-frame, 3, and bend "S" hook to prevent removal.

Chain can now be used to support PTO when Snow Blower is removed from tractor.

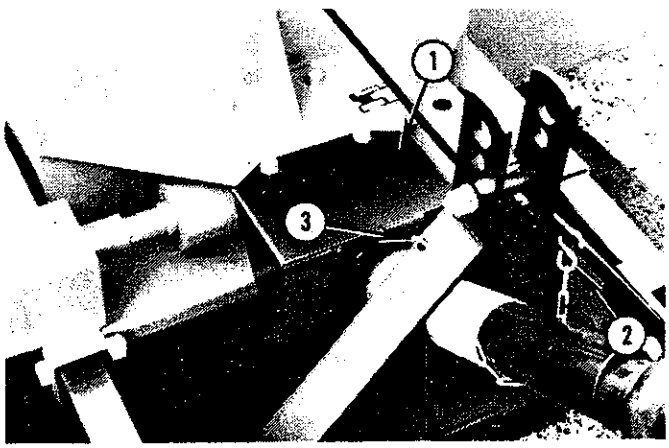

FIG. 12

TRACTOR ATTACHING REAR SNOW BLOWER

Position tractor in front, keeping lower links level wtih Snow Blower lower link pins.

Attach left lower link to Snow Blower and secure with linch pin.

Attach right lower link, using levelling crank if necessary to assist attachment. Secure with linch pin.

Attach top link using adjustment to assist in attaching and secure pin with linch pin.

Level Snow Blower using levelling crank on right lower lift arm to level side-to-side.

Level Snow Blower front to rear using top link.

Install stabilizers or sway blocks to hold the Snow Blower directly behind tractor during operation.

Release PTO storage chain and attach it to one side of A-frame.

Attach PTO to tractor making certain spring-loaded pin snaps fully in groove of tractor PTO shaft.

NOTE: Depending on tractor used, it may be necessary to install front tractor weights to maintain front end stability.

TRACTOR DETACHING REAR SNOW BLOWER

Select a level surface to detach.

Remove PTO shaft and support it with chain.

Detach top link using adjustment as required.

Detach right lower link using adjustable link to assist if necessary.

Detach left lower link.

CHUTES & ROTATION

ASSEMBLY CHUTE TO SNOW BLOWER

FIG. 13: Grease base of chute. Install chute over chute base on Snow Blower. Install three retainer plates using six 1/2" x 1" bolts, lock washers and nuts.

NOTE: Keep plates out away from chute when tightening bolts. If for any reason, one of the plates causes chute to bind, it should be shimmed with small washers.

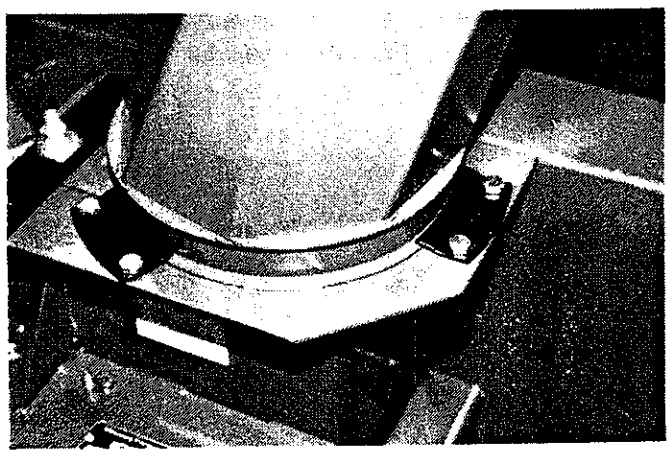

FIG. 13

MANUAL CHUTE ROTATION BRACKET (Rear Mounted Snow Blower)

FIG. 14: Install manual rotation bracket to left of chute. Secure with 5/8" x 2-1/2" bolt and nylon lock nut on left, 1, and 1/2" x 1-3/4" bolt, 2, with lock washer and nut on right side.

Install one end of rotation system tube over welded pin at, 3, on bracket.

Insert crank handle through other end of bracket, 4, and inside tube until first holes in tube and handle are in alignment. Secure with 1/4" x 1-1/2" bolt and nylon lock nut.

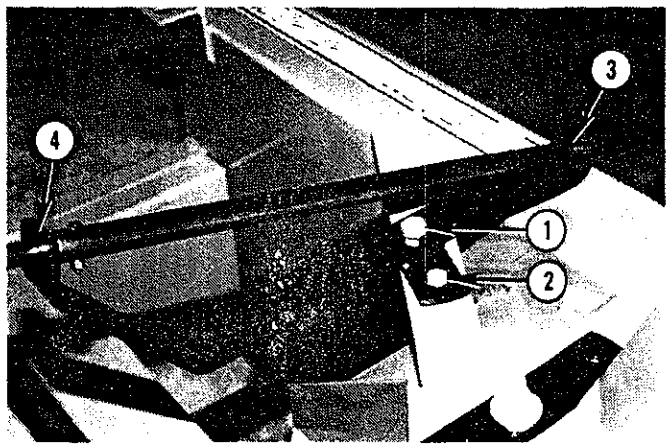

FIG. 14

CABLE INSTALLATION — MANUAL CHUTE ROTATION (Rear Mounted Snow Blower)

FIG. 15: Place discharge chute with opening to blow directly in front of blower auger.

Turn chute opening towards the left (counter-clockwise) approximately 100°. Right and left are determined by facing in direction Snow Blower will travel when in use.

Tape ends of cable with electrical tape to keep ends from fraying.

Thread cable through two small holes in base of chute from inside to outside.

Tie a single knot in cable leaving 61" of cable on left side.

Pass this end of cable around chute clockwise, through pulley on rotation bracket and through upper hole in rotation tube with 5" of cable extending beyond tube. Attach temporarily with cable clamp.

Turn rotation handle clockwise holding other end of cable with your free hand so cable remains tight as handle is turned.

Continue turning handle until 5-6" of cable extends beyond lower part of rotation tube and lower hole is horizontal.

Pass cable through lower hole in rotation tube and attach the two ends of cable together securely using cable clamps.

NOTE: Chute should have equal rotation to each side of center.

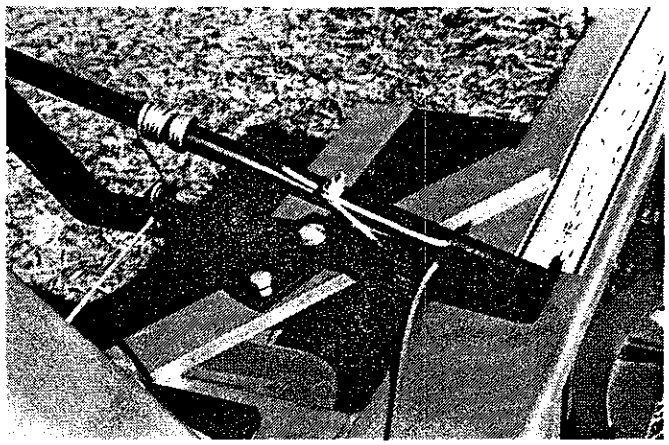

FIG. 15

HYDRAULIC CHUTE ROTATION BRACKET (STANDARD CHUTE)

FIG. 16: Install hydraulic rotation arm, with pulleys, 1, to left of chute with 11/16" washers above and below arm. Secure with 5/8" x 2-1/2" bolt, 2, with lock nut, 3. Tighten nut to remove end play but still allow arm to move.

Attach 3" x 8" hydraulic cylinder, not supplied.

Attach hoses to remote outlets on tractor.

Position arm in center of travel.

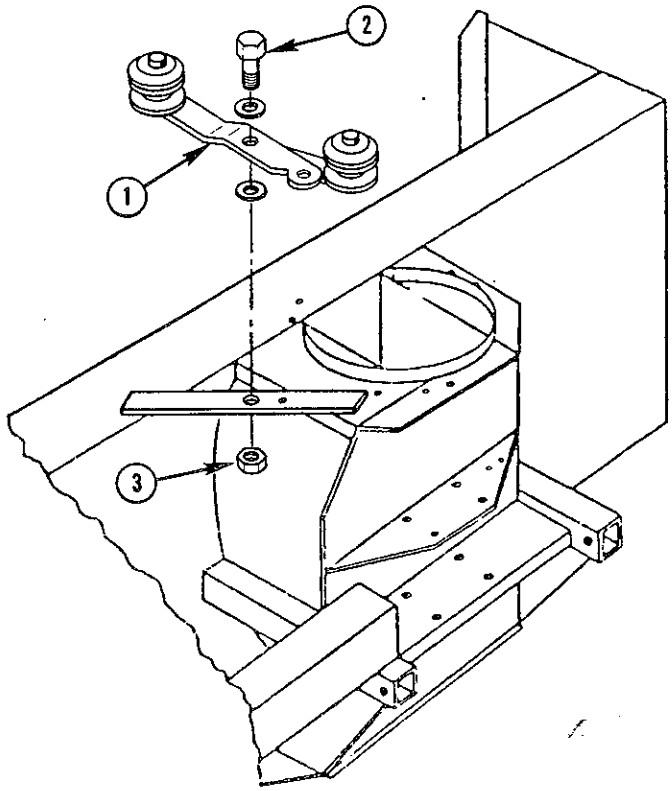

FIG. 16

CABLE INSTALLATION — HYDRAULIC CHUTE (STANDARD CHUTE)

FIG. 17: Position chute to blow directly in front of blower auger.

Pass cable through small holes in base of chute, from inside out.

Wrap ends of cable with electrical tape to keep ends from fraying.

Wind cables in opposite directions around chute.

Pass cables around pulleys, 1, from outside to inside.

Insert cable ends through special 1/2" x 2" bolts, 2, (with hole) and insert 1/2" x 1" bushings, 3, on bolt and against cable.

Install bolts, to replace bolts holding chute retainer plates but do not tighten.

With rotation arm in center of travel (parallel to Snow Blower), and chute positioned to blow directly in front of blower auger. Tighten cables at each bolt and tighten bolts.

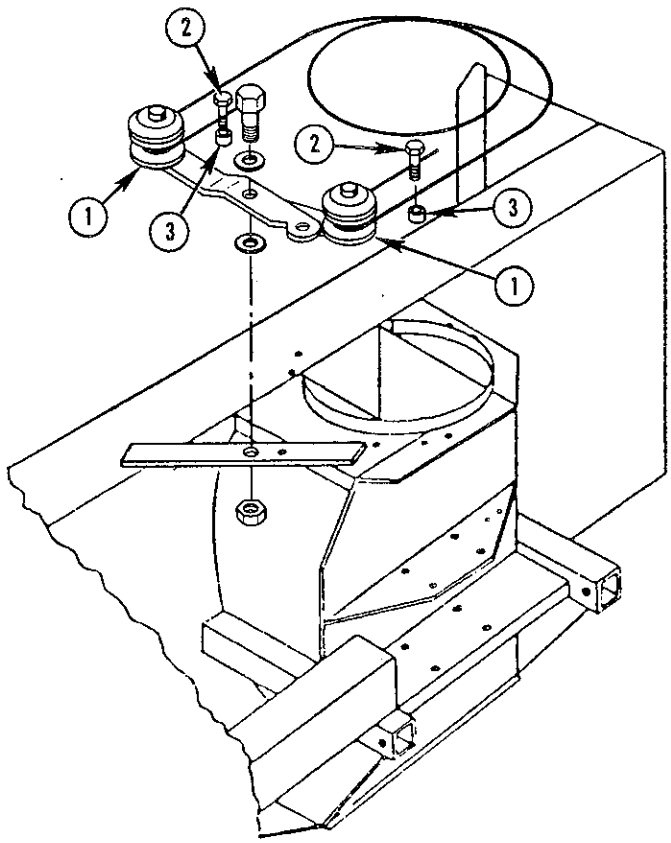

FIG. 17

MANUAL DEFLECTOR

To adjust deflector angle, adjust upper rod in lower pipe and install hairpin in desired hole, according to the distance the snow must be thrown.

WARNING: BEFORE ADJUSTING DEFLECTOR, STOP BLOWER, ROTATE CHUTE TO THE RIGHT AS FAR AS POSSIBLE AND STOP THE ENGINE.

ACCESSORIES

- Subframe for Front Mount

Accessories include assembly instructions.

LUBRICATION

Use a good grade gun grease and lubricate as follows:

Description and Fig. Number	Time Interval	Lubrication Required
Chute Base, Fig. 2	As Required	Lubricate and rotate base until it rotates smoothly.
Crank — Manual Chute Rotation, Fig. 3	As Required	Oil to obtain smooth operation.
Auger Drive Chain, Fig. 4	4 Hours	A. Clean conditions. Use chain lubricant after machine use when chain is warm. B. Sandy-muddy conditions. Do not lubricate chain as sand and mud adhers to oiled chain.
Univeral Joints, Fig. 5	8 Hours	Lubricate one fitting each U-joint. Slide telescoping sections apart and lubricate sliding sections.
Gearbox, Fig. 6	Monthly	Check oil level. Add AGMA 5 EP or 90 extreme pressure oil.
Cross Shaft Shear Plate, Fig. 7	Monthlv	Lubricate plate.
PTO Shear Plate, Fig. 8	Monthly	Lubricate one grease fitting.

TORQUE SPECIFICATION TABLE

GENERAL TORQUE SPECIFICATION TABLE (Revised 2-74)

USE THE FOLLOWING TORQUES WHEN SPECIAL TORQUES ARE NOT GIVEN

NOTE: These values apply to fasteners as received from supplier, dry, or when lubricated with normal engine oil. They do not apply if special graphited or moly disulphide greases or other extreme pressure lubricants are used. This applies to both UNF and UNC threads.

SEE Grade No.		2				5				8 *			
Bolt head identification marks as per grade NOTE: Manufacturing Marks Will Vary													
		Torque				Torque				Torque			
Bolt Size		Pounds Feet		Newton-Meters		Pounds Feet		Newton-Meters		Pounds Feet		Newton Meters	
Inches	Millimeters	Min.	Max.	Min.	Max.	Min.	Max.	Min.	Max.	Min.	Max.	Min.	Max.
1/4	6.35	5	6	6.8	8.13	9	11	12.2	14.9	12	15	16.3	30.3
5/16	7.94	10	12	13.6	16.3	17	20.5	23.1	27.8	24	29	32.5	39.3
3/8	9.53	20	23	27.1	31.2	35	42	47.5	57.0	45	54	61.0	73.2
7/16	11.11	30	25	40.7	47.4	54	64	73.2	86.8	70	84	94.9	113.9
1/2	12.70	45	52	61.0	70.5	80	96	108.5	130.2	110	132	149.2	179.0
9/16	14.29	65	75	88.1	101.6	110	132	149.2	179.0	160	192	217.0	260.4
5/8	15.88	95	105	128.7	142.3	150	180	203.4	244.1	220	264	298.3	358.0
3/4	19.05	150	185	203.3	250.7	270	324	366.1	439.3	380	456	515.3	618.3
7/8	22.23	160	200	216.8	271.0	400	480	542.4	650.9	600	720	813.6	976.3
1	25.40	250	300	338.8	406.5	580	696	786.5	943.8	900	1080	1220.4	1464.5
1-1/8	25.58	—		—		800	880	1084.8	1193.3	1280	1440	1735.7	1952.6
1-1/4	31.75	—		—		1120	1240	1518.7	1681.4	1820	2000	2467.9	2712.0
1-3/8	34.93	—		—		1460	1680	1979.8	2278.1	2380	2720	3227.3	3688.3
1-1/2	38.10	—		—		1940	2200	2630.6	2983.2	3160	3560	4285.0	4827.4

* Thick nuts must be used with Grade 8 bolts.

METRIC BOLT TORQUE SPECIFICATIONS

Size of screw	Grade No.	Coarse thread			Fine thread		
		Pitch (mm)	Pounds Feet	Newton-Meters	Pitch (mm)	Pounds Feet	Newton-Meters
M6	4T (4)	1.0	3.6–5.8	4.9–7.9	—	–	–
	7T (7)		5.8–9.4	7.9–12.7		–	–
	8T (8) (11)		7.2–10	9.8–13.6		–	–
M8	4T	1.25	7.2–14	9.8–19	1.0	12–17	16.3–23
	7T		17–22	23–29.8		19–27	25.7–36.6
	8T		20–26	27.1–35.2		22–31	29.8–42
M10	4T	1.5	20–25	27.1–33.9	1.25	20–29	27.1–39.3
	7T		34–40	46.1–54.2		35–47	47.4–63.7
	8T		38–46	51.5–62.3		40–52	54.2–70.5
M12	4T	1.75	28–34	37.9–46.1	1.25	31–41	42–55.6
	7T		51–59	69.1–79.9		56–68	75.9–92.1
	8T		57–66	77.2–89.4		62–75	84–101.6
M14	4T	2.0	49–56	66.4–75.9	1.5	52–64	70.5–86.7
	7T		81–93	109.8–126		90–106	122–143.6
	8T		96–109	130.1–147.7		107–124	145–168
M16	4T	2.0	67–77	90.8–104.3	1.5	69–83	93.5–112.5
	7T		116–130	157.2–176.2		120–138	162.6–187
	8T		129–145	174.8–196.5		140–158	189.7–214.1
M18	4T	2.0	88–100	119.2–136	1.5	100–117	136–158.5
	7T		150–168	203.3–227.6		177–199	239.8–269.6
	8T		175–194	237.1–262.9		202–231	273.7–313
M20	4T	2.5	108–130	146.3–176.2	1.5	132–150	178.9–203.3
	7T		186–205	252–277.8		206–242	279.1–327.9
	8T		213–249	288.6–337.4		246–289	333.3–391.6

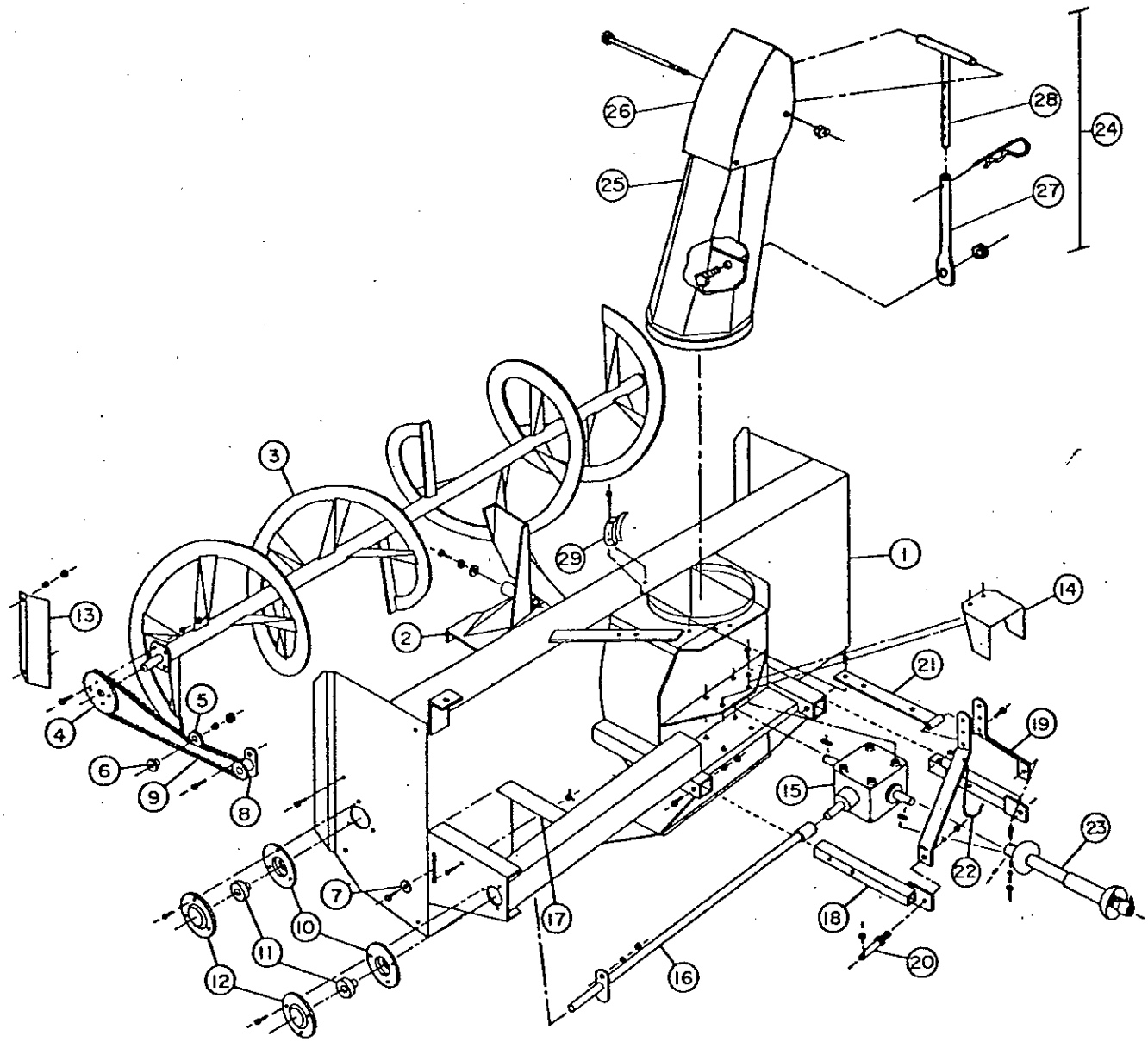

FIGURE: I

FRAME AND RELATED PARTS

FRAME AND RELATED PARTS

ITEM	PART NUMBER	DESCRIPTION	QUANTITY
1	654162	Frame	1
2	654164	Rotor Assembly	1
	654174	Key 3/8" x 3/8" x 2 3/4" lg.	1
	O/L	Hex bolt 5/8" NC x 1½" lg with lockwasher and hex nut.	1
	O/L	Flat washer 11/16" dia.	1
3	654165	Auger assembly	1
4	654167	Sprocket 60A32	1
	O/L	Hex bolt 3/8" NC x 1¼" lg with lockwasher and hex. nut	4
5	65410	Idler Sprocket	1
6	654172	Washer "spacer"	1
7	654649	Washer	1
	O/L	Hex bolt 5/8/ NC x 2 3/4" lg with lockwasher and hex. nut	1
	O/L	Flatwasher 11/16" dia.	1
8	654173	Sprocket with shear plate	1
	O/L	Hex bolt ½" NC x 1½" lg, gr. 5 with lockwasher and hex. nut	1
9	654168	Auger drive chain no: 60, 79 links connecting link and half link.	1
10	654171	Flange	3
11	654170	Bearing with locking collar replaced by 4300009	3
12	654169	Capped flange	3
	O/L	Hex bolt 3/8" NC x 1" lg. with lockwasher and hex. nut	9
13	654650	Chain guard	1
	O/L	Hex bolt 3/8" NC x 1" lg. with lockwasher and hex. nut	2
14	654654	P.T.O. protector	1
15	654178	Gear box assembly	1
	O/L	Hex. bolt ½" NC x 1" lg. with lockwasher	8
16	654175	Driving Shaft	1
17	655284	Chain cover	1
	O/L	Carriage bolt 3/8" NC x 4½" lg with lockwasher and wing nut	1
18	654188	Lower hitch	2
	O/L	Hex bolt 3/4" NC x 3 3/4" lg. with lockwasher and hex nut	2

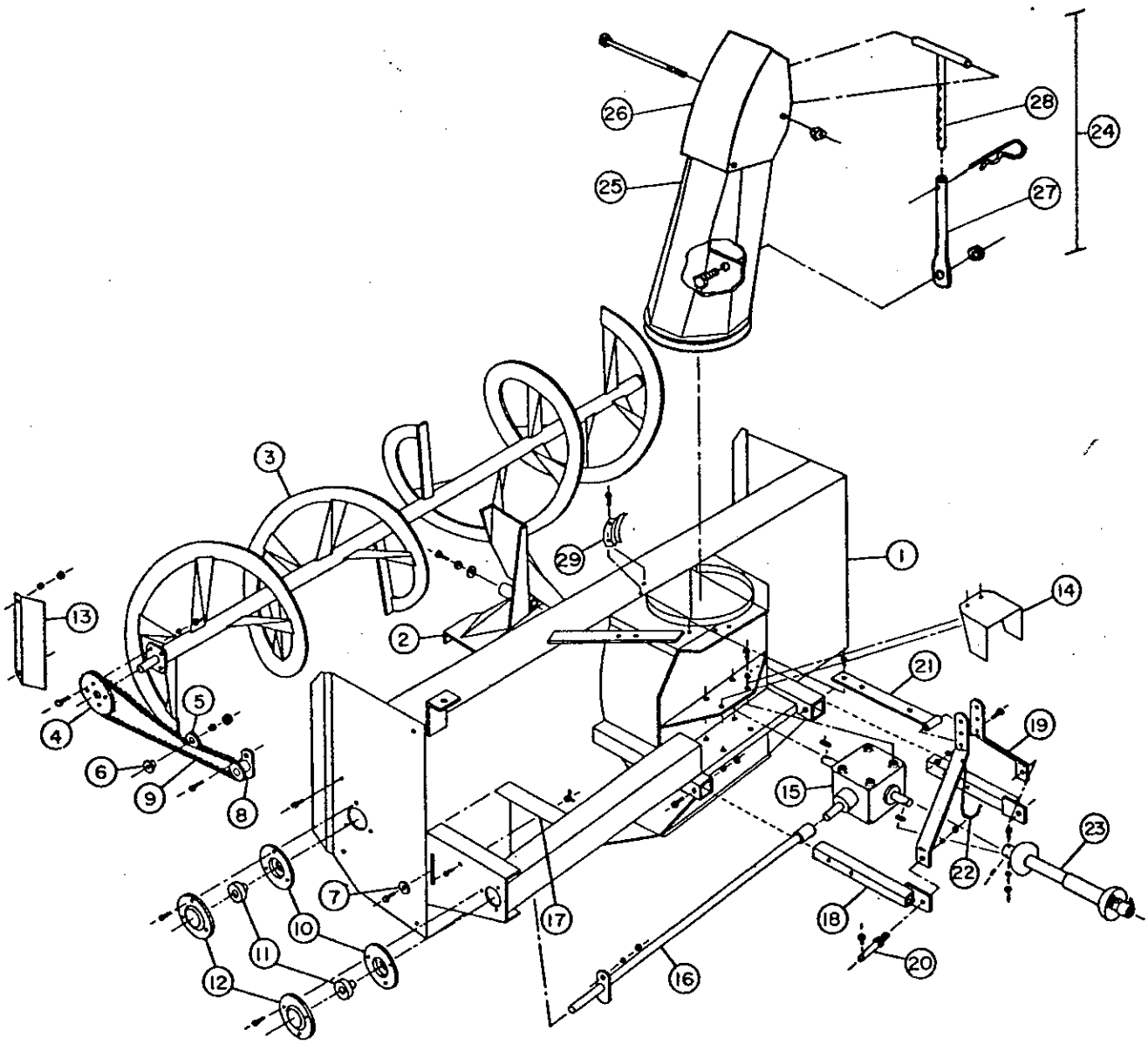

FIGURE: I

FRAME AND RELATED PARTS

FRAME AND RELATED PARTS

ITEM	PART NUMBER	DESCRIPTION	QUANTITY
19	654194	3 point hitch	2
	O/L	Hex bolt 5/8" NC x 4" lg. with lockwasher and hex. nut	1
20	654196	Pin cat. 1	2
21	654195	Upper hitch	1
	O/L	Hex bolt 5/8" NC x 2" lg. with lockwasher and hex. nut	1
22	654200	Suspension chain	1
	O/L	S-hook, ¼" x 2" lg.	2
23	655309	P.T.O. shaft "G & G" serial N14	1
	654179	P.T.O. shaft "Hayes & Dana", serial 1240	1
24	655772	Standard chute assembly	1
25	655792	Chute base	1
26	655793	Chute deflector	1
27	655600	Adjustment pipe	1
28	655771	Adjustment pin	1
29	654197	Retaining plates	3
	O/L	Hex bolt ½" NC x 1" lg. with lockwasher and hex. nut.	4

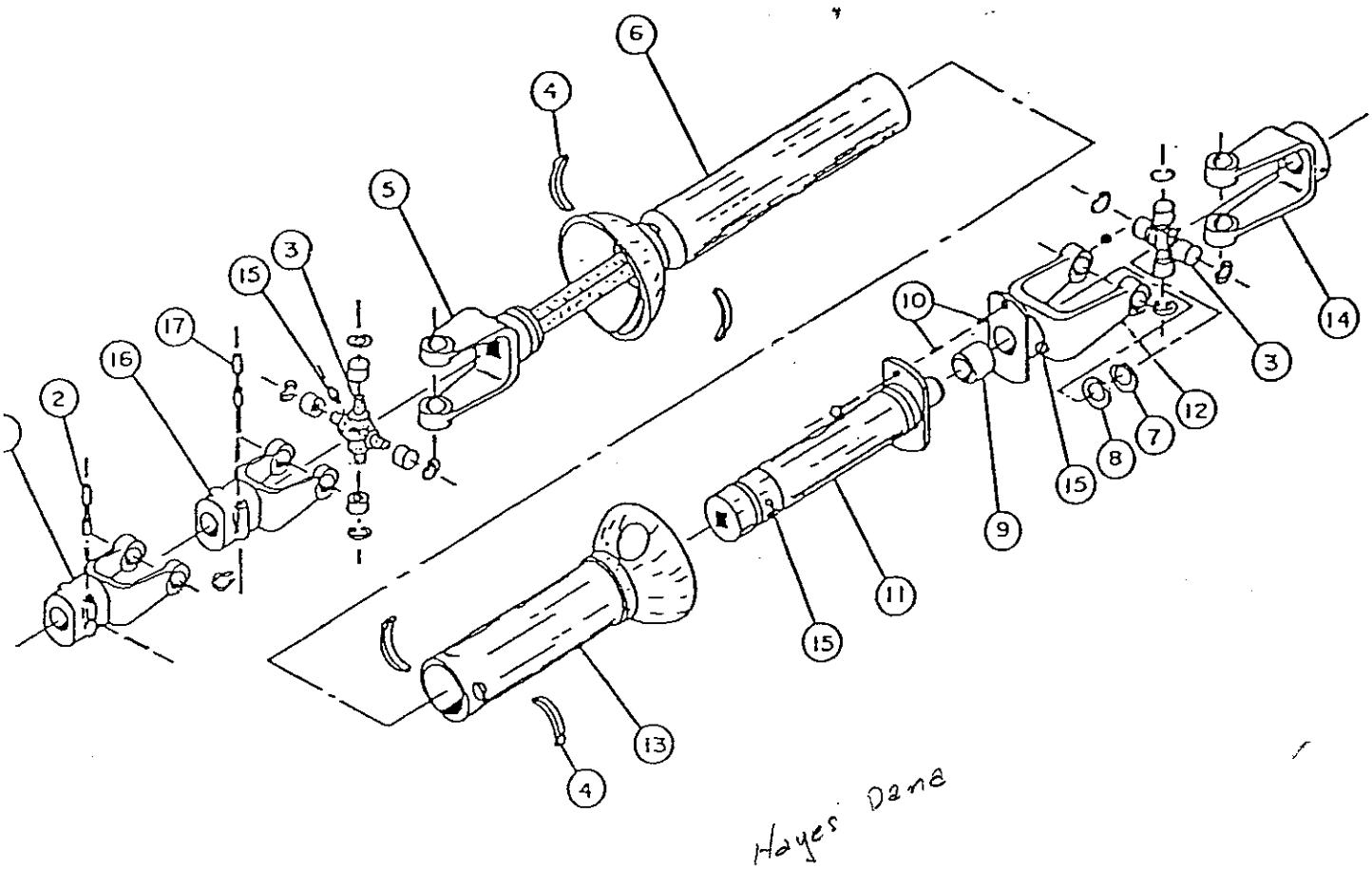

P.T.O. SHAFT (654179)

ITEM	PART NUMBER	DESCRIPTION	QUANTITY
1	654206	Quick disconnect yoke	1
2	65429	Yoke stopper kit	1
3	654208	Universal joint kit	2
4	654209	Shield nylon retainers	8
5	654210	Yoke and male shaft ass'y	1
6	654211	Outer shield	1
7	65483	Snap ring heavy	1
8	65435	Flat washer	1
9	65436	Self-oiling bushing	1
10	654212	Shear bolt bushings	2
11	654213	Female shaft and flange assembly	1
12	654214	Yoke and flange assembly	1
13	654215	Inner Shield	1
14	654216	Yoke	1
15	654106	Grease fittings	4
16	655038	Quick Disconnect yoke	1
17	655046	Yoke stopper kit	1

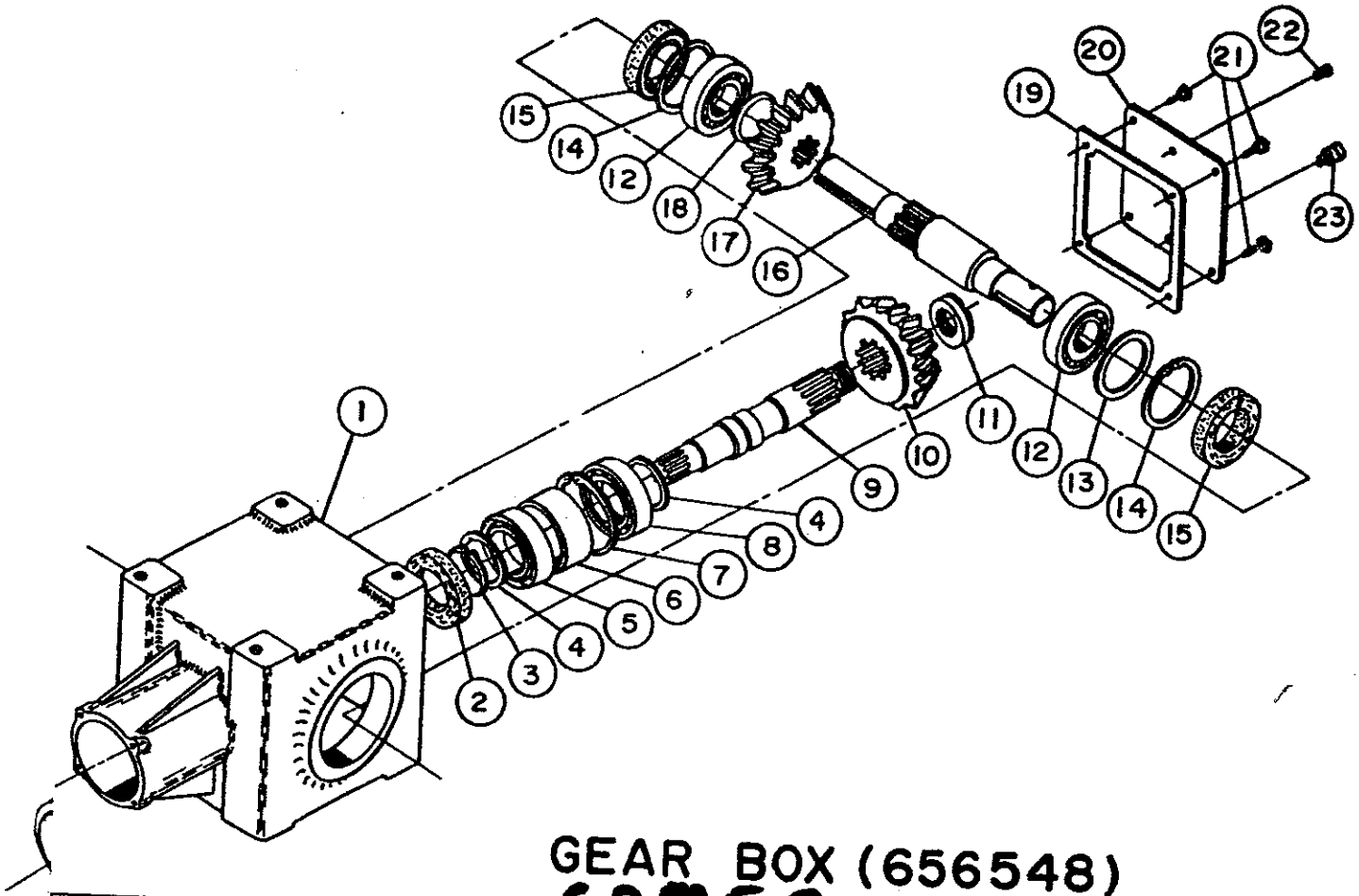

GEAR BOX (656548)

COMER

ITEM	PART NUMBER	DESCRIPTION	QTY
1	656640	Casing	1
2	656650	Dust excluder 35 x 72 x 12	1
3	656652	External circlip 35 UNI7435	1
4	656649	Shim 35,3 x 43	2
5	656653	Bearing 6207	1
6	656648	Spacer	1
7	656654	Internal circlip 72 UNI7437	1
8	656647	Bearing 30207	1
9	656651	Shaft	1
10	656645	Gear Z 18	1
11	656646	External circlip 40 UNI7435	1
12	656641	Bearing 30208	1
13	656644	Shim 65,3 x 79,7	2
14	656642	Internal circlip 80 UNI7437	1
15	656643	Dus excluder 40 x 80 x 12	2
16	656656	Shaft	2
17	656657	Gear Z 18	1
18	656655	Shim 40,3 x 51,5	1
19	656658	Gasket	1
20	656660	Cover	1
21	656659	Hex bolt M10 x 14	1
22	655259	Oil plug 3/8" NPT	4
23	656662	Oil filter plug	2
			1

SAFETY DECALS

DANGER
MISE EN GARDE

ROTATING DRIVE LINE

FAILURE TO HEED THESE WARNINGS MAY RESULT IN PERSONAL INJURY OR DEATH.

KEEP CLOTHING, YOURSELF AND OTHERS WELL CLEAR.

DO NOT OPERATE UNLESS PTO GUARDS, TRACTOR MASTER SHIELD AND IMPLEMENT GUARDS ARE IN PLACE.

PTO GUARDS MUST TURN FREELY AND BE PROPERLY ATTACHED AND MAINTAINED.

U-JOINT YOKES MUST BE SECURELY LOCKED ONTO TRACTOR AND IMPLEMENT SHAFTS.

BE SURE TRACTOR DRAWBAR AND IMPLEMENT HITCH ARE ADJUSTED CORRECTLY.

GREASE TELESCOPING SHAFT REGULARLY TO MINIMIZE THRUST FORCES.

TRANSMISSION ROTATIVE À CARDAN

NÉGLIGER D'OBSERVER CES RÈGLES DE SÉCURITÉ PEUT ÊTRE CAUSE DE BLESSURES GRAVES OU MORTELLES.

TENEZ-VOUS, VOS VÊTEMENTS ET TOUTES PERSONNES À L'ÉCART DE LA PDF.

NE JAMAIS PROCÉDER À LA MISE EN MARCHE AVANT D'AVOIR FIXÉ EN PLACE LES PROTECTEURS DE LA PDF, CELUI DE LA MACHINE ET LE PROTECTEUR PRINCIPAL DU TRACTEUR.

LES PROTECTEURS DE LA PDF DOIVENT TOURNER LIBREMENT, ÊTRE BIEN RACCORDÉS ET GARDÉS EN BON ÉTAT.

LES FOURCHES DE CARDAN DOIVENT ÊTRE FIXÉES FERMEMENT AUX ARBRES DE COMMANDE DU TRACTEUR ET DE LA MACHINE.

ASSUREZ-VOUS QUE LES BARRES D'ATTELAGE DU TRACTEUR ET DE LA MACHINE SONT BIEN RÉGLÉES.

GRAISSER L'ARBRE TÉLESCOPIQUE RÉGULIÈREMENT POUR MINIMISER LA RÉSISTANCE AXIALE.

26

BER-655384
LOCATED ON P.T.O. SHIELD

WARNING

1. FOR SAFE OPERATION FOLLOW ALL OPERATING INSTRUCTIONS AND SAFETY PRECAUTIONS IN OPERATOR'S MANUAL.
2. KEEP HANDS, FEET AND CLOTHING AWAY FROM POWER DRIVEN PARTS.
3. STOP ENGINE BEFORE LEAVING OPERATOR POSITION.
4. WAIT FOR ALL MOVEMENT TO STOP BEFORE STARTING TO ADJUST, LUBRICATE, CLEAN OR UNCLOG THE MACHINE.
5. KEEP PEOPLE AND PETS A SAFE DISTANCE FROM MACHINE.
6. KEEP ALL GUARDS AND SHIELDS IN PLACE

FAILURE TO FOLLOW SAFE OPERATING PROCEDURES MAY RESULT IN INJURY.

ATTENTION

1. POUR UN FONCTIONNEMENT SÉCURITAIRE SUIVRE INSTRUCTIONS D'OPÉRATEUR ET DE SÉCURITÉ DANS MANUEL D'OPÉRATEUR.
2. GARDER LES MAINS, PIEDS ET VÊTEMENTS ÉLOIGNÉS DES ÉLÉMENTS MOBILES OU ROTATIFS.
3. AVANT DE QUITTER LA MACHINE, DÉSENGAGER TOUTES LES COMMANDES ET ARRÊTER LE MOTEUR.
4. ARRÊTER COMPLÈTEMENT LA MACHINE POUR EFFECTUER L'ENTRETIEN, L'AJUSTEMENT OU DÉGAGER CELLE-CI.
5. GARDER LES GENS ET ANIMAUX À UNE DISTANCE SÉCURITAIRE.
6. GARDER TOUS LES ÉCRANS PROTECTEURS EN PLACE.

NÉGLIGER CECI PEUT ENTRAÎNER DES BLESSURES GRAVES.

45

BER-656060
LOCATED ON CHUTE BASE

DANGER

TO AVOID SERIOUS INJURY
KEEP CLEAR OF THIS COLLECTOR WHILE ENGINE IS RUNNING

POUR ÉVITER BLESSURES GRAVES
SE TENIR ÉLOIGNÉ DU SOUFFLEUR LORSQUE LE MOTEUR EST EN MARCHE

11

BER-655652
LOCATED ON BACK RIGHT SIDE ON SNOWBLOWER

DANGER

TO AVOID SERIOUS INJURY
KEEP HANDS OUT OF THIS DISCHARGE GUIDE WHILE ENGINE IS RUNNING

POUR ÉVITER BLESSURES GRAVES
GARDER LES MAINS ÉLOIGNÉES DE CETTE SORTIE LORSQUE LE MOTEUR EST EN MARCHE

12

BER-655653
LOCATED ON CHUTE DEFLECTOR